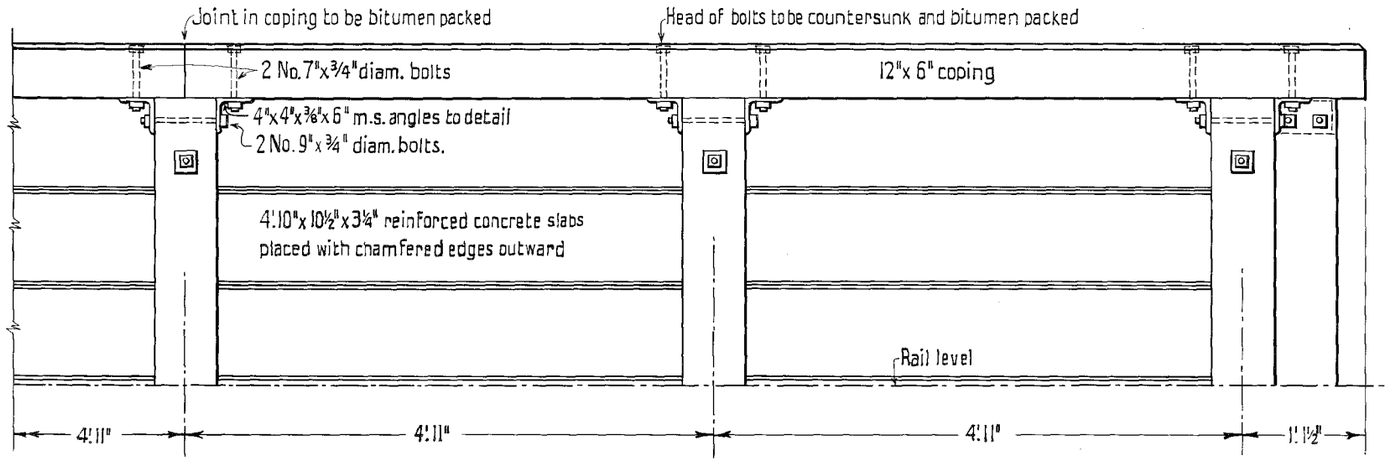

ELEVATION TO RAIL

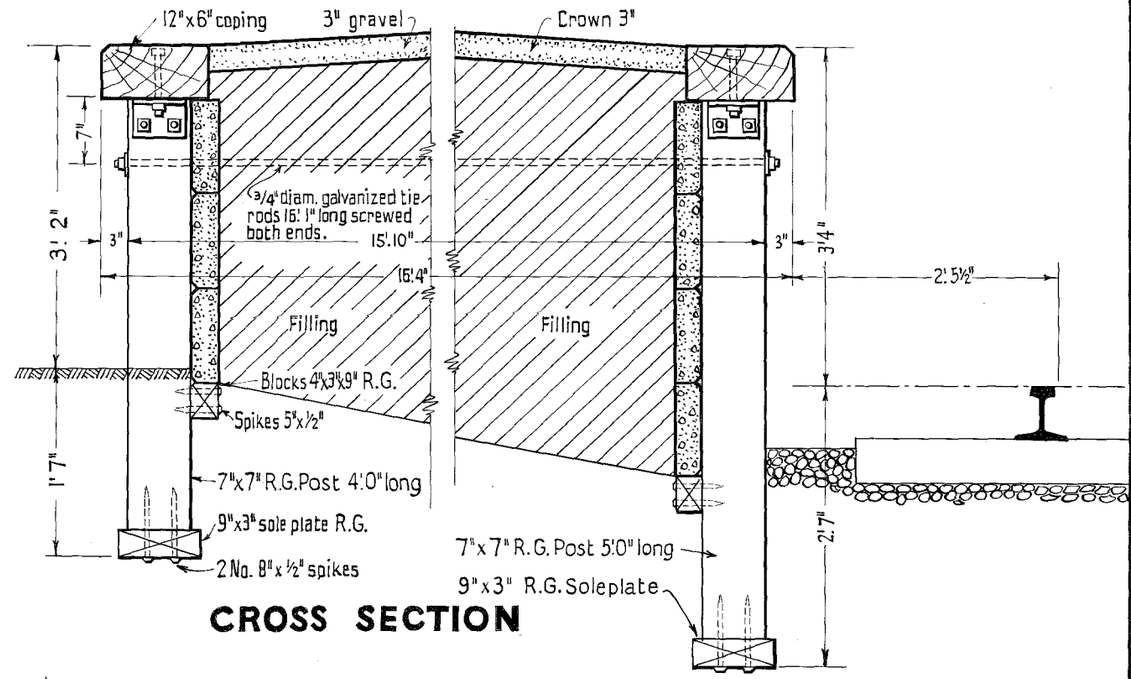

CROSS SECTION

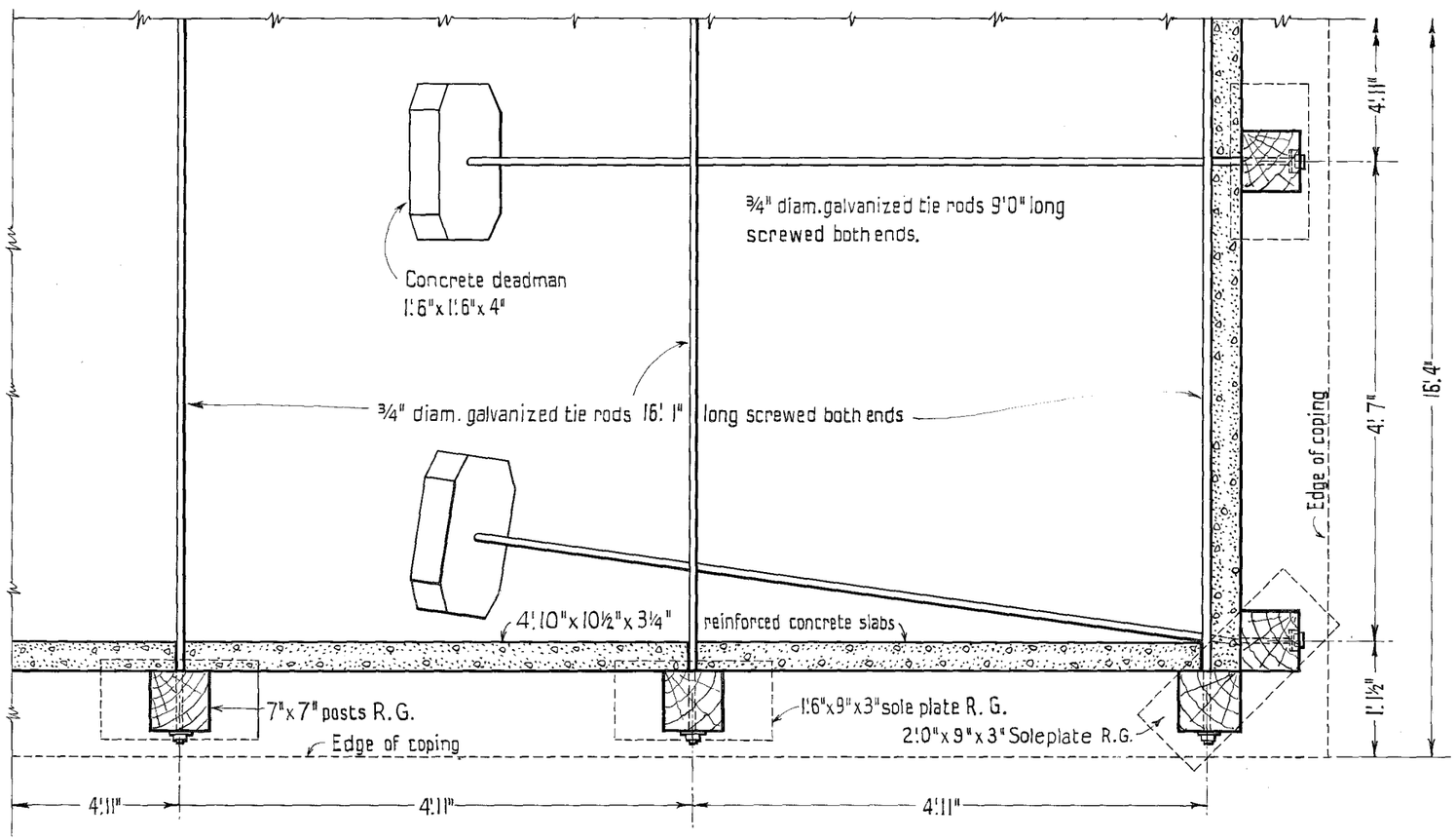

HALF PLAN

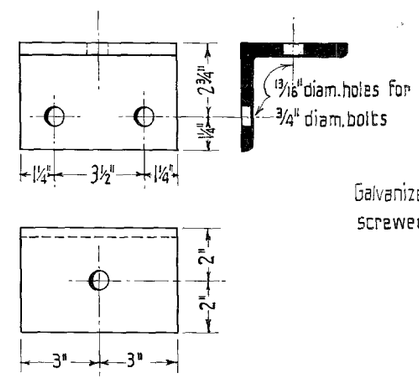

DETAIL OF M.S. ANGLE BRACKETS
4" × 4" × 3/8"

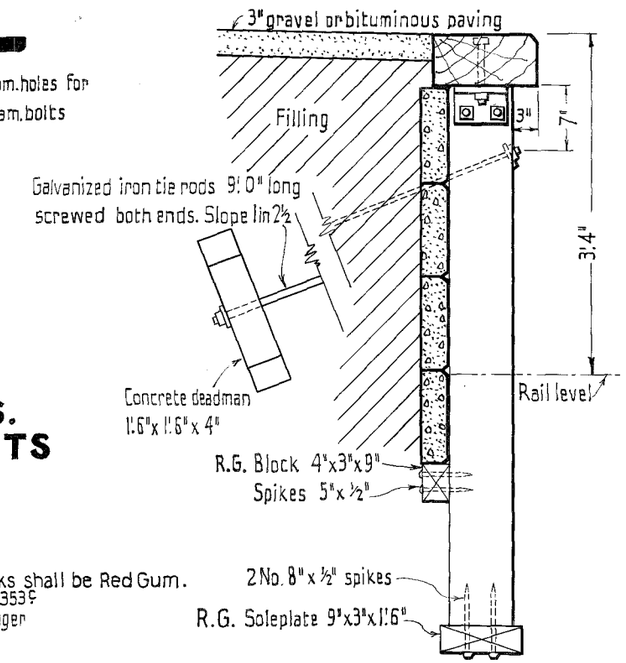

SECTION AT END

NOTES:

Posts, soleplates and blocks shall be Red Gum.
This plan supercedes Plan No F 353C
For platform facing of passenger platform see plan No. F 339

This Plan supercedes Plan No. F 353D

Rev.	Date	Amendment
E	21-1-64	Rail to Coping height increased to 3'-4"

VICTORIAN RAILWAYS WAY AND WORKS BRANCH

STANDARD DRAWING

DETAILS OF PLATFORM FACING FOR GOODS PLATFORM

SCALES: ½" = 1'.0", 1½" = 1'.0"

Approved — Chief Civil Engineer

Drawn by J.S.S. — Checked by D.B.C.

Chief Architect

Adopted JUNE 1951

PLAN No. F 353E